LPB15-□□□□□□□□□□□□

Fluorine Lining Butterfly Valve

LAPAR
Lapar Control Valve

Code	Actuator	Action	Air Fail Position	Control	Structure	Body	Sealing	Disc	Connection	DN	PN
LPB15-	1 Pneumatic	D Double-acting	1 Normally Open	A On-off	1 A Type	B CF8M	P PTFE	B CF8M+FEP(F46)	2 Wafer	□	■
	2 Pneumatic & Handwheel	S Single-acting	2 Normally Closed	B Control	2 LT Type	C CF8	Y FEP(F46)	C CF8+FEP(F46)	0 Others		
	3 Electric DC24V	0 Others	3 Flexible	C Intelligent	0 Others	D WCB	0 Others	D WCB+FEP(F46)			
	4 Electric AC220V		4 Held	0 Others		E A395		E A395+FEP(F46)			
	5 Electric AC380V		0 Others			6 A126		6 A126+FEP(F46)			
	7 Handle					0 Others		0 Others			
	8 Turbine										
	0 Others										

Driving Mode	Electric, Pneumatic (5~7bar)
DN	50 ~ 600mm
PN	1.0 ~ 1.6MPa
Applicable Temp.	PTFE & FEP(F46): −29 ~ +100℃
Medium	Strong acid,Strong alkali,Strong oxidant
Optional	Limit switch,Positioner,Solenoid valve,Air filter regulator,Handwheel
Connection Type	GB9113.1

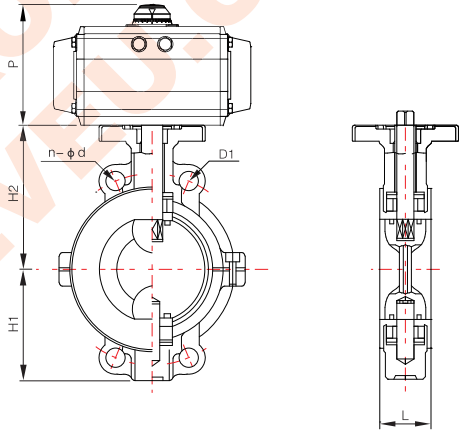

GB PN6/10/16

Unlt:mm

SIZE		L	PN6		PN10		PN16		H1	H2
			D1	n- ϕ d	D1	n- ϕ d	D1	n- ϕ d		
40	1 1-2″	33	100	4-14	110	4-18	110	4-18	60	120
50	2″	43	110	4-14	125	4-18	125	4-18	65	143
65	2 1-2″	46	130	4-14	145	4-18	145	4-18	71	155
80	3″	46	150	4-18	160	8-18	160	8-18	77	162
100	4″	52	170	4-18	180	8-18	180	8-18	107	181
125	5″	56	200	8-18	210	8-18	210	8-18	122	197
150	6″	56	225	8-18	240	8-23	240	8-23	150	210
200	8″	60	280	8-18	295	8-23	295	12-23	165	240
250	10″	68	335	12-18	350	12-23	355	12-26	201	286
300	12″	78	395	12-23	400	12-23	410	12-26	234	309
350	14″	78	445	12-23	460	16-23	470	16-26	301	329
400	16″	102	495	16-23	515	16-26	525	16-30	333	361
450	18″	114	550	16-23	565	20-26	585	20-30	358	393
500	20″	127	600	20-23	620	20-26	650	20-34	392	427
600	24″	154	705	20-25	725	20-30	770	20-36	454	492
700	28″	165	810	24-25	840	24-30	840	24-36	508	563
800	32″	190	920	20-30	950	24-34	950	24-39	592	630
900	36″	203	1020	20-30	1050	28-34	1050	28-39	632	660
1000	40″	216	1120	28-30	1160	28-36	1170	28-42	750	800

P: Please refer to the actuator configuration table

D1 is designed to meet GB9113.1

The seat and valve plate of butterfly valve are made of PTFE. They have the mechanical strength of common butterfly valve, and can play the PTFE properties of resistance to strong chemical mediator. Adopt double period of shaft, and up and down segmentation technology. Do not apply to the technical medium with particles and high temperature.

※ Apply chemical medium.
※ The up and down holes of valve plate adopts spherical friction surface design. Torque is smaller, and sealing is better.
※ The flange hole applies to a variety of standards

LAPAR CONTROL VALVE
WWW.VALVED.COM